TKDIV/CE 90-240 V AC - Electrically actuated DUAL BLOCK® 3-way ball valve DN 10:50

3 way DUAL BLOCK® valve with female metric ends with multi-volt electric actuator 90-240 V AC 50-60 Hz "T" ball, configuration 1.

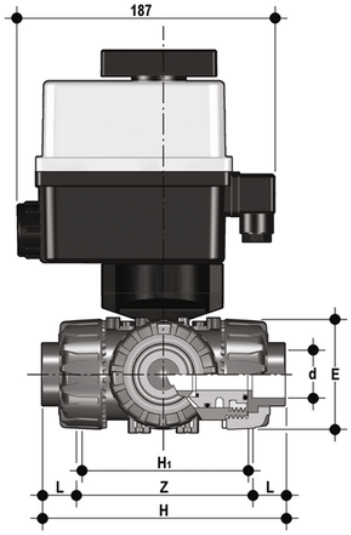

EPDM

Reference	d	DN	PN	E	H	H1	L	Z	B	B_1	g
TKDIVEM016E1	16	10	16	54	118	80	14	90	205	29	1843
TKDIVEM020E1	20	15	16	54	118	80	16	86	205	29	1843
TKDIVEM025E1	25	20	16	65	145	100	19	107	216	34.5	2076
TKDIVEM032E1	32	25	16	73	160	110	22	116	221	39	2299
TKDIVEM040E1	40	32	16	86	188.5	131	26	136.5	238	46	2880
TKDIVEM050E1	50	40	16	98	219	148	31	157	244	52	3242
TKDIVEM063E1	63	50	*10	122	266.5	179	38	190.5	261	62	4362

FKM

Reference	d	DN	PN	E	H	H1	L	Z	B	B_1	g
TKDIVEM016F1	16	10	16	54	118	80	14	90	205	29	1843
TKDIVEM020F1	20	15	16	54	118	80	16	86	205	29	1843
TKDIVEM025F1	25	20	16	65	145	100	19	107	216	34.5	2076
TKDIVEM032F1	32	25	16	73	160	110	22	116	221	39	2299
TKDIVEM040F1	40	32	16	86	188.5	131	26	136.5	238	46	2880
TKDIVEM050F1	50	40	16	98	219	148	31	157	244	52	3242
TKDIVEM063F1	63	50	*10	122	266.5	179	38	190.5	261	62	4362

TKDIV/CE 90-240 V AC - Electrically actuated DUAL BLOCK® 3-way ball valve DN 10:50

In addition to the manually actuated version, TKD is also available in TKD/CE electrically actuated and TKD/CP pneumatically actuated configurations. Actuators are firmly connected to the valve by the special FIP PowerQuick modules fully made of PP-GR technopolymer. TKD/CE and TKD/CP are constructed with actuators meeting current regulations and selected by FIP according to their quality and reliability requirements. The efficiency of these valves, tested according to the company's quality standards, is guaranteed by the expertise and know-how that FIP dedicates to manufacturing its products.

- Electric actuator constructed according to FIP specifications; with plastic shell and standard emergency override. Available with voltages from 12 to 240V
- Rack & pinion type pneumatic actuator constructed according to FIP specifications: fully protected against weather corrosion available in double-acting (DA) or simple-acting normally closed (NC) or normally open (NO) versions. Three different positions according to 2 configurations are possible with T ball: 0°-90°-180° and 0°-90°-270°
- High surface finish stem with double O-Ring. The double connection key system guarantees solid and reliable actuator torque transmission to the ball
- Easy to install PowerQuick module for pneumatic or electric actuator fully made of highly robust technopolymer
- DUAL BLOCK® patented lock system that ensures union nut tightening hold even in severe conditions such as vibrations or heat dilation
- Ball shutter high surface finish with floating type full passage with T or L port

- Joint system for solvent welding (PVC-U and PVC-C only), for welding (PP-H only), for threading
- Patented SEAT STOP® ball seat carrier system that lets you micro-adjust ball seats and minimise axial force effects
- Easy radial disassembly allowing quick replacement of O-rings and ball seats without any need for tools
- Radial dismounting valve body (True Union) made for PVC-U, PVC-C and PP-H injection moulding equipped with built-in bores for actuation. ISO 9393 compliant test requisites
- Option of disassembling downstream pipes with the valve in the closed position
- High surface finish stem with double O-Ring and double connection key to the ball, equipped with visual ball position indicator for correct handle installation
- Integrated bracket for valve anchoring
- Possibility of installing pneumatic and/or electric actuators thanks to the robust anchor tower for easy and quick automation using the PowerQuick module