Bend Double Socket 67°30′ F/F

- EN 1329 Solvent Welded PVC-U Fittings
- B s2 d0 Fire Reaction Euroclass
- Color: RAL 7037 Grey

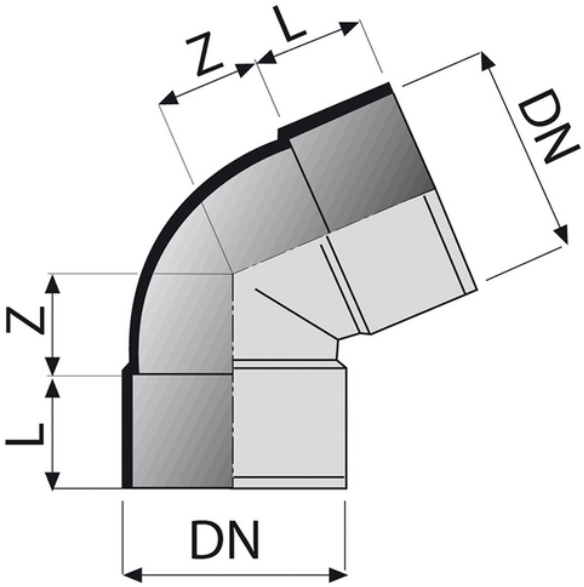

Reference	Z (mm)	L (mm)	DN (mm)	Version
027030M	18	23	32	upon request
027040M	21	27	40	upon request
027050M	27	32	50	upon request
027100M	53	57	100	upon request